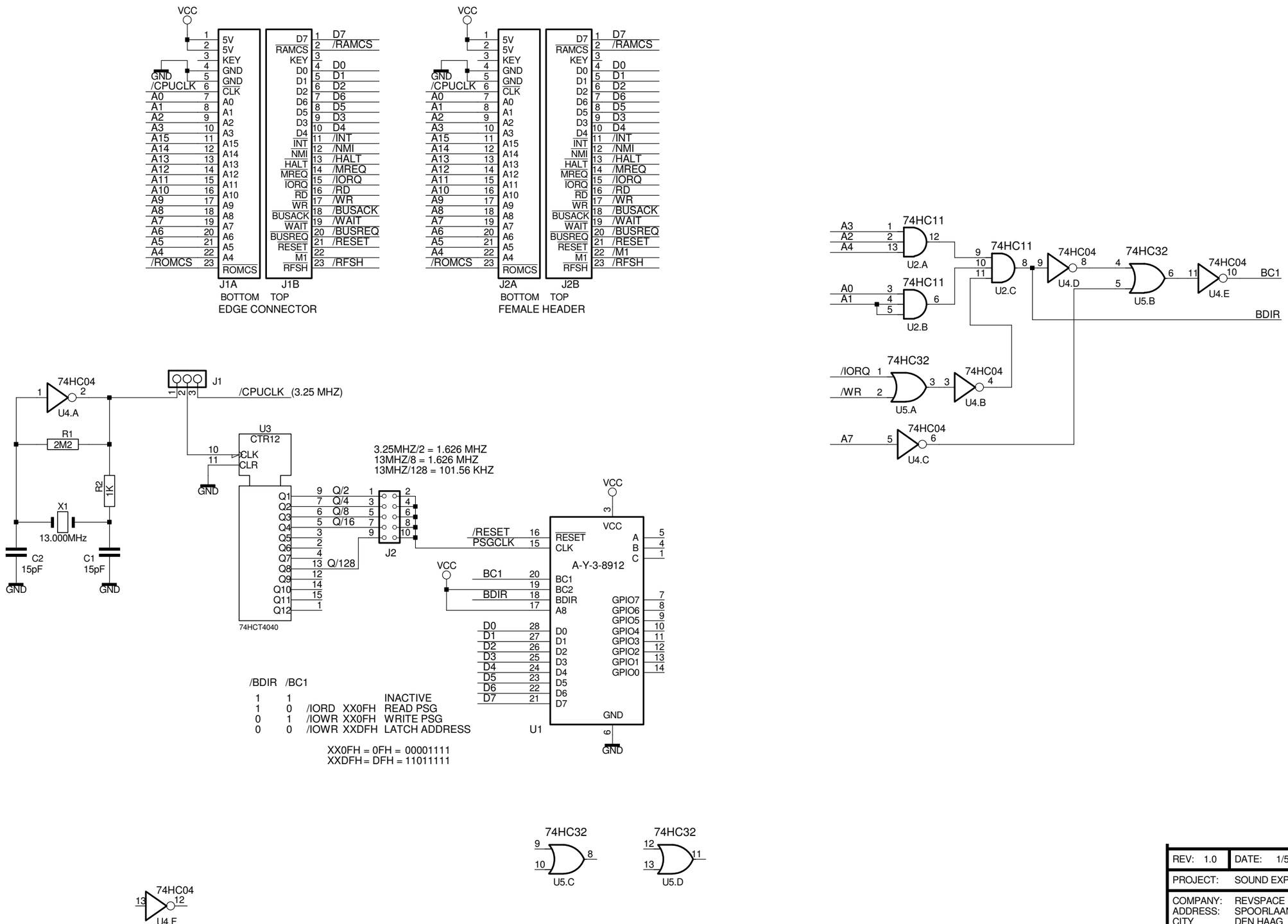

REV: 1.0	DATE: 1/5/2016	ENG: MAHJONGG
PROJECT:	SOUND EXPANSION BOARD	
COMPANY: REVSPACE ADDRESS: SPOORLAAN 5D, 2495AL CITY DEN HAAG COUNTRY: NETHERLANDS		
INITIAL 1/5/2015	PAGE: 1	OF: 1